Roll No. _____

END SEMESTER EXAMINATION
SEMESTER- II (Old Course)

COURSE CODE : G 202 | **DURATION : 3 (THREE)HRS**
COURSE TITLE : ENGINEERING DRAWING II | **MAXIMUM MARKS : 50**
SESSION : JULY-DEC.' 2021 | **PASS MARKS : 35 %**

NOTE: *1. Attempt any 5 (five) questions of 10 marks each.*
2. Mark for each question is shown against it.
3. Assume suitable logical data wherever necessary.

1.	**(a)**	Write down the principles of development? Explain the methods of development of lateral surfaces with examples?	**(2+3)**
	(b)	Differentiate between Isometric drawing and Isometric projection.	**(5)**
2.	**(a)**	A vertical chimney of 70cm diameter joins a roof sloping at 35° with horizontal. The shortest portion over the roof is 32cm obtain the shape of the sheet metal from where the chimney can be fabricated.	**(6)**
	(b)	Write down the principles of orthographic projection? Explain any one methods of projection in brief with examples?	**(2+2)**
3.	**(a)**	A pentagonal pyramid, side of base 25mm and height 52mm stands with its base on H.P and on edge of base is parallel to V.P and nearer to it, it is cut by a plane perpendicular to V.P. inclined at 40° to H.P. and passing through point of axis, 32mm above base. Draw the sectional top view and develop the lateral surface of the truncated pyramid.	**(7)**
	(b)	What is section? Explain the types of section and selection of sectional view.	**(3)**
4.	**(a)**	Draw the sectional front view AA, left side view and top view of the object shown in fig. (i) 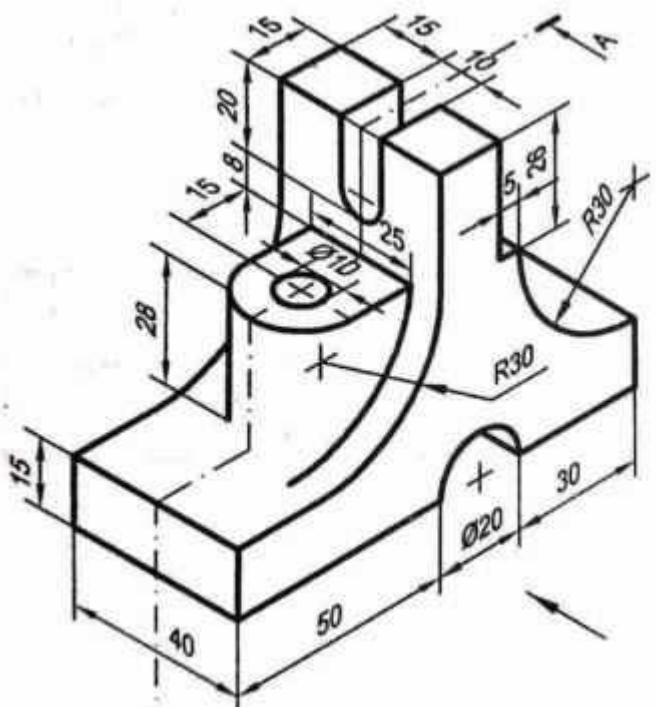	**(10)**

5.	**(a)**	A cone of 50mm diameter of base and 65mm altitude is lying on one of its generators on H.P with its axis parallel to V.P. it is sectioned by a plane parallel to V.P and 5mm in front of the axis of the cone. i) Draw the sectional front view and ii) draw development of the lateral surface of the remaining portion of the cone.	**(10)**
6.	**(a)**	Draw the conventional representation of the following materials: (i) Glass, (ii) concrete (iii) liquid, (iv) wood (iv) metals;	**(5)**
	(b)	Draw the orthographic view of the following pictorial view in third angle projection. 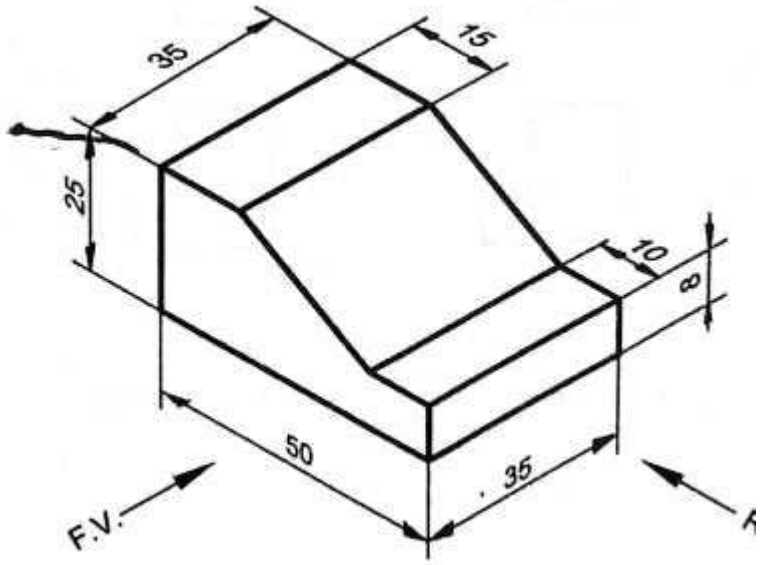 FIG. 15	**(5)**
7.	**(a)**	Draw the isometric view for the given orthographic projection; 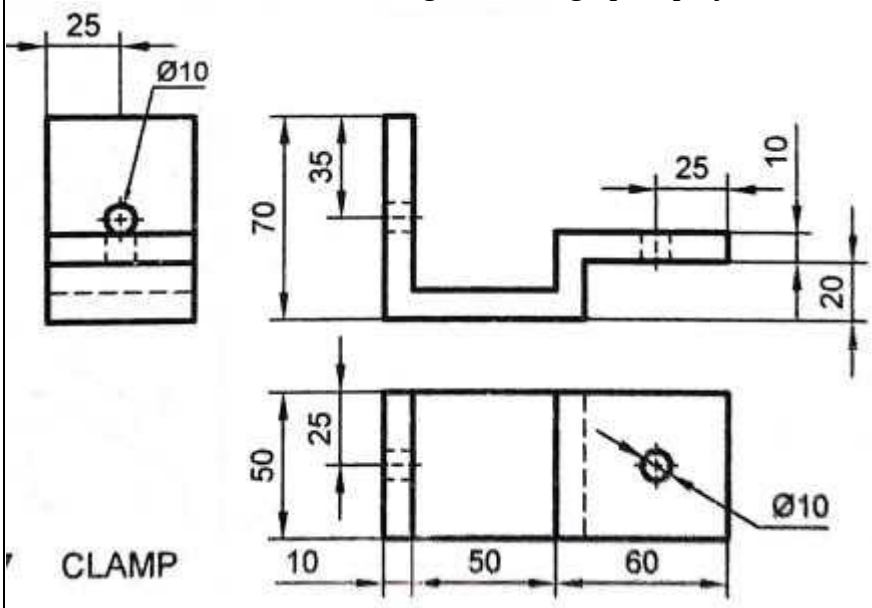 CLAMP	**(10)**
8.		A square pyramid, base 35mm side, axis 70mm long, rests on its base on H.P, such that two adjacent sides of the base are equally inclined to V.P. it is sectioned by a plane perpendicular to V.P. and inclined at 25° to H.P and passing through the midpoint of the axis.	**(10)**