Roll No. _____

END SEMESTER EXAMINATION
SEMESTER- V

COURSE CODE :CE 504 | **DURATION : 3 (THREE)HRS**
COURSE TITLE : ESTIMATING-I | **MAXIMUM MARKS : 75**
SESSION : JULY-DEC'2021 | **PASS MARKS : 35 %**

NOTE: *1. Attempt any 5 (five) questions.*
3. Mark for each question is shown against it.
4. Assume suitable logical data wherever necessary.

1. (a) What are the necessary data to prepare an estimate? Explain the principle of unit of measurements. **(5)**

(b) Write the unit of measurement and rate of payment for painting, steel rebars, 1st class masonry, Plastering and Earthwork. **(5)**

(c) Explain bill of quantities (BOQ) and building cost index (BCI). **(5)**

2. (a) Write the differences between Revised and Supplementary estimate. **(5)**

(b) Explain in detail about Item Rate Estimate. **(6)**

(c) If the plinth area estimate of a building with 150 m^2 plinth area in a particular locality is Rs. 2500000, then find the plinth area estimate of the building in the same locality with plinth length and width as 12 m and 9.5 m respectively. **(4)**

3. (a) Explain Centre line method and Long wall short wall method in building estimating. **(6)**

(b) Work out the quantities of various items of wall of length 10 m and height of wall above plinth level as 3.30 m for figure shown below. Also prepare an abstract of estimated cost of these items: **(9)**

i) Foundation Concrete at Rs 12000 per cu m.
ii) Masonry work at Rs 5000 per cu m.
iii) 2.5 cm DPC at Rs 8500 per sq m.

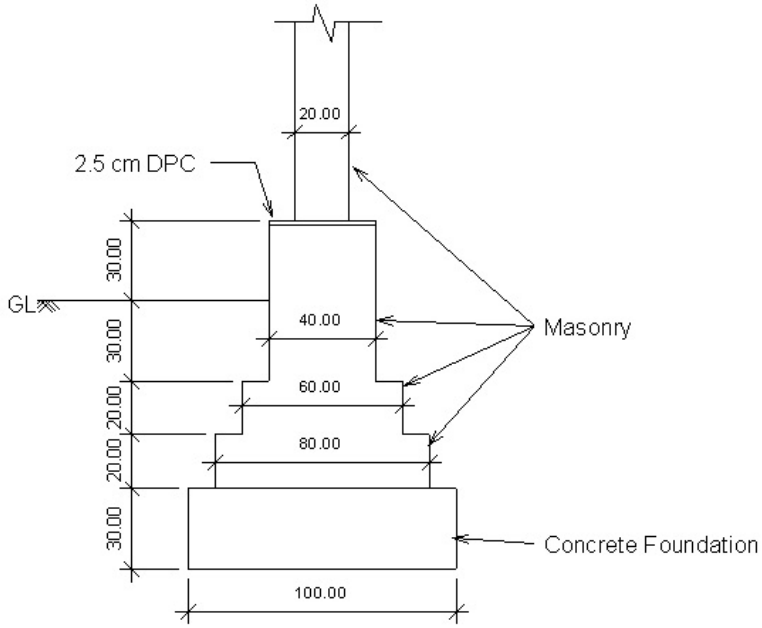

Note: All measurements are in **cm** unless specified

4. Estimate the quantities of materials required in a reinforced concrete slab of 12 cm thick. The outside dimensions of slab are 4.20 m x 3.00 m. Main reinforcement bars are 12 mm dia. spaced 12.50 cm c/c and distribution bars are 6 mm dia. spaced 25 cm c/c. Steel reinforcements are to be taken under a separate its. Alternate bars are bent up at 1/6th span from the support. Also draw a cross-section of the slab. **(15)**

5. The plan and sectional elevation of water tank are shown below. Estimate the quantities of following items:- **(15)**

i) Earthwork in excavation in foundation
ii) Cement concrete in 1:5:10 in foundation
iii) First class brickwork in foundation and superstructure
iv) 12mm thick plastering 1:6 cement mortar both inside and outside
v) 5cm C.C flooring.

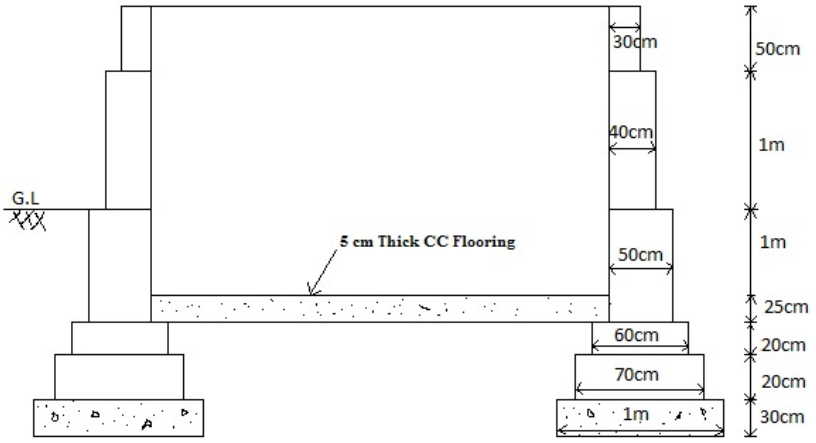

SECTION X-X

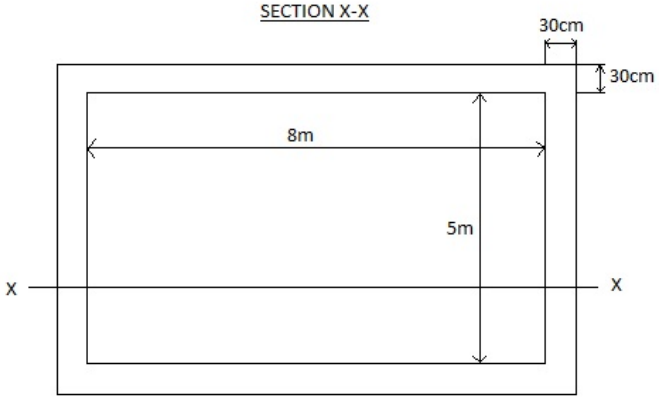

PLAN

6. Below figure shows plan and sectional elevation of a residential building. Estimate the following quantities and estimate the total costing required to complete the following works including all the different charges as applicable. **(15)**

a. Earthwork excavation in foundation at Rs. 175.00 per cu m.
b. Cement concrete (C.C) bed 1:4: 8 in foundation at Rs. 1500.00 per cu m.
c. Size stone masonry (SSM) in foundation and plinth at Rs. 2000.00 per cu m.
d. Burnt 1st class brick masonry in super structure (cement: Sand = 1: 6) at Rs. 2000.00 per cu m.

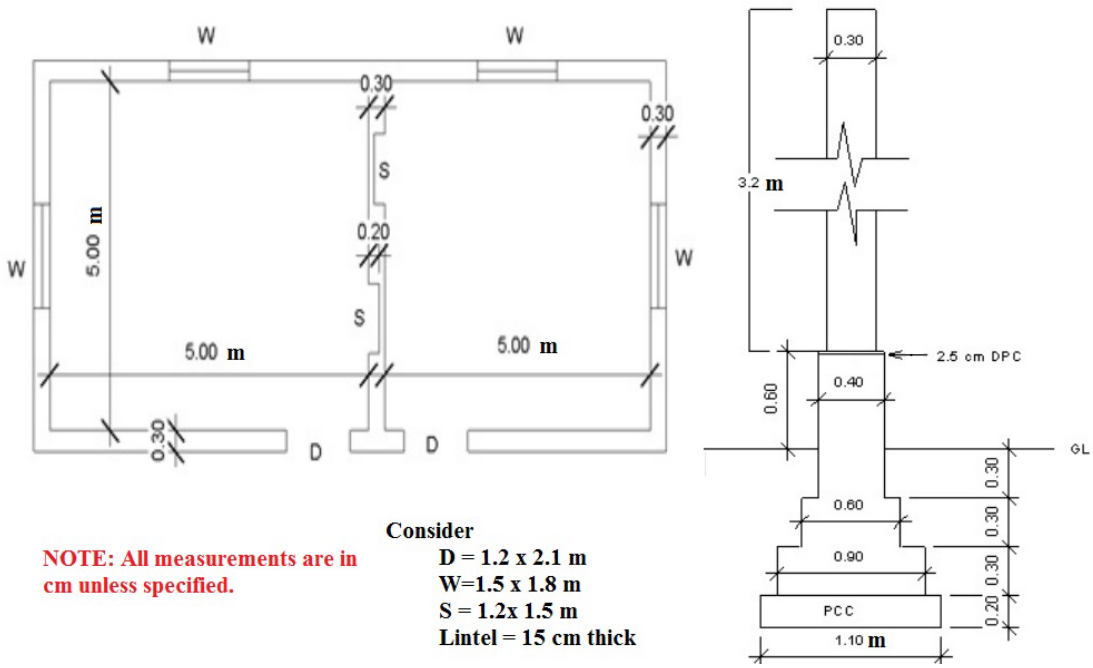

NOTE: All measurements are in cm unless specified.

Consider

D = 1.2 x 2.1 m
W=1.5 x 1.8 m
S = 1.2x 1.5 m
Lintel = 15 cm thick

7. Estimate the quantities of earthwork, Cement concrete bed, brick work and finishing of steps given in drawing. **(15)**

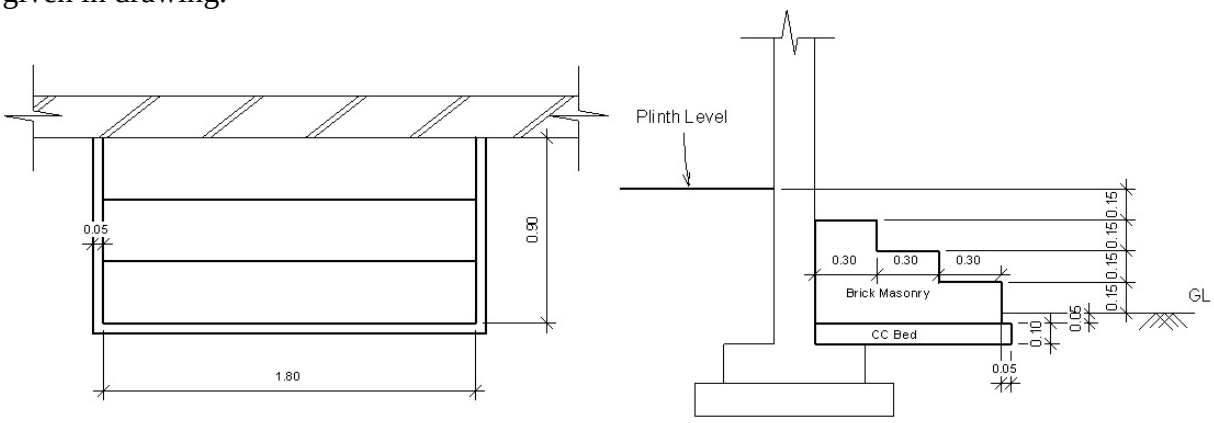

NOTE: All dimensions are in metre unless specified.

8 Prepare details of measurement for the column as shown in the below figure. **(15)**

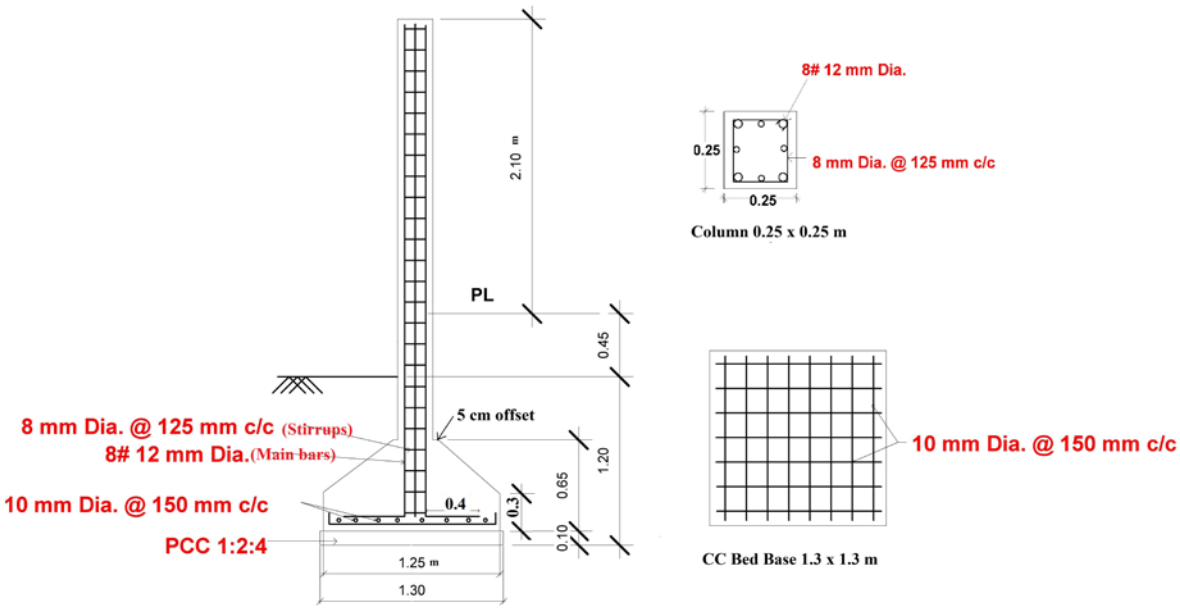

NOTE:

All Measurements are in metre (m) unless specified

XXXXXXXXXXXXXXXXXX