Roll No. _____

END SEMESTER EXAMINATION
SEMESTER- V

COURSE CODE :EE506 | **DURATION : 3 (THREE)HRS**
COURSE TITLE: POWER ELECTRONICS | **MAXIMUM MARKS : 75**
SESSION :JULY-DEC2021 | **PASS MARKS : 35 %**

NOTE: *1.Attempt any 5 (five) question*
2. Mark for each question is shown against it.
3. Assume suitable logical data whenever necessary

1.			
	(a)	An SCR having a turn ON time of 5µsec,latching current of 50mA and holding current of 40mA is triggered by a short duration pulse and is used in the circuit shown in figure the minimum pulse width requires to turn the SCR ON will be 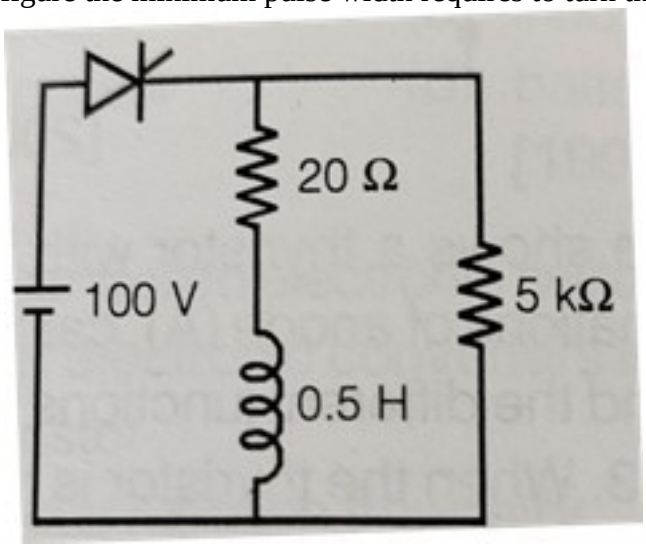	(6)
	(b)	Explain the working of single phase half wave controlled rectifier with RL load.	(7)
	(c)	Define (i) latching current (ii) commutation.	(2)
2.	**(a)**	Explain the working characteristics and application of GTO.	(7)
	(b)	What is chopper? Explain the working and characteristics of class c-chopper.	(6)
	(c)	What is inverter? Write two application of inverter.	(2)
3.	(a)	With suitable block diagram explain the working of UPS.	(6)
	(b)	Explain the mode of operation of series inverter and write its application.	(7)
	(c)	Write two needs of cyclo-converter for practical application.	(2)
4.	**(a)**	Explain the working and operation of step-up cyclo-converter.	(7)
	(b)	What are the differences between natural and forced commutation.	(4)
	(c))	Explain the working of class E (external pulse commutation) forced commutation.	(4)
5.	**(a)**	What is the use of freewheeling diode in thyristor circuit?	(5)
	(b)	Explain the method of protection of thyristor.	(5)
	(c)	Explain the mode of operation of on-line ups.	(5)

6.	**(a)**	Explain the mode of operation of off-line ups and mention its specification.	**(5)**
	(b)	Explain the mode of operation of parallel inverter.	**(5)**
	(c)	Explain the mode of operation of type B chopper.	**(5)**
7.	**(a)**	Explain the working and characteristics of IGBT.	**(7)**
	(b)	Explain the working of PUT.	**(5)**
	(c)	Write three application of chopper.	**(3)**
8.	**(a)**	Write the comparison between SCR, TRIAC and DIAC	**(9)**
	(b)	Explain the working and characteristics of type A chopper.	(6)

xxxxxxxxxxxxxxxxxx