Roll No. _____

END SEMESTER EXAMINATION

SEMESTER- I

COURSE CODE : ES 101 **DURATION :2 (TWO)HRS**
COURSE TITLE : ENGINEERING GRAPHICS **MAXIMUM MARKS : 60**
SESSION : JULY-DEC'2021 **PASS MARKS : 35 %**

NOTE: *1. Attempt any 6(six) questions.*
3. Mark for each question is shown against it.
4. Assume suitable logical data wherever necessary.

PART – I

1.	**(a)**	What is representative fraction (RF) or scale factor?	**(2)**
	(b)	Construct a plain scale of 1:40 to show metres and decimetres and long enough to measure upto 6 metres. Show on this scale distance of 4 metres and 5 decimetres.	**(8)**
2.	**(a)**	What is the difference between: (i) Enlarging scale and reducing scale (ii) Plain scale and diagonal scale	**(2×2)**
	(b)	Construct Isometric Scale.	**(1×6)**
3.	**(a)**	Draw the front view, top view and side view of the following figure. 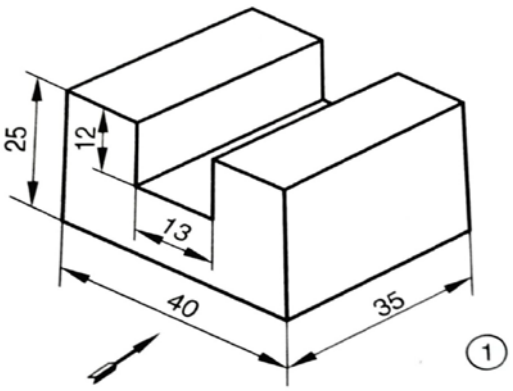 	**(10)**
4.	**(a)**	Draw the Isometric view of the given below orthographic view: 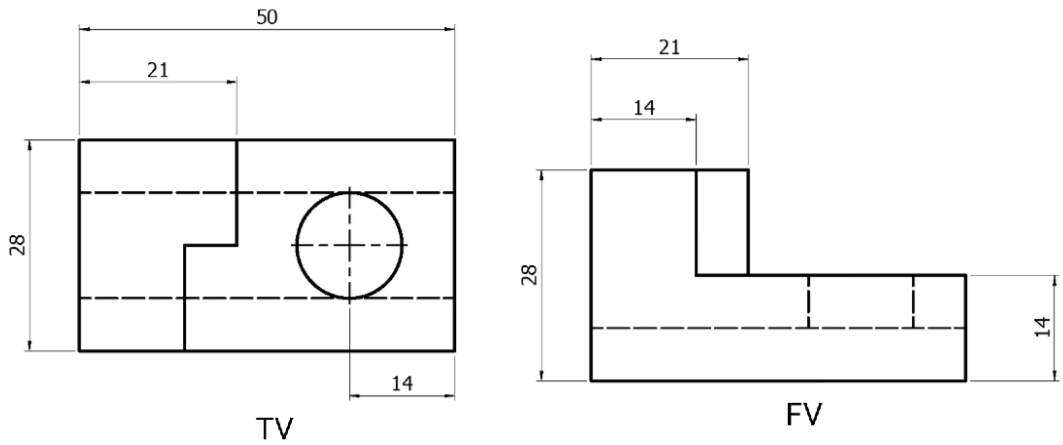 	**(10)**
5.	**(a)**	Define Engineering drawing instruments. Also explain any four instrument's uses.	**(2+8)**

6.	**(a)**	Draw the isometric projection of an object from the top view and the front view given in the figure below: 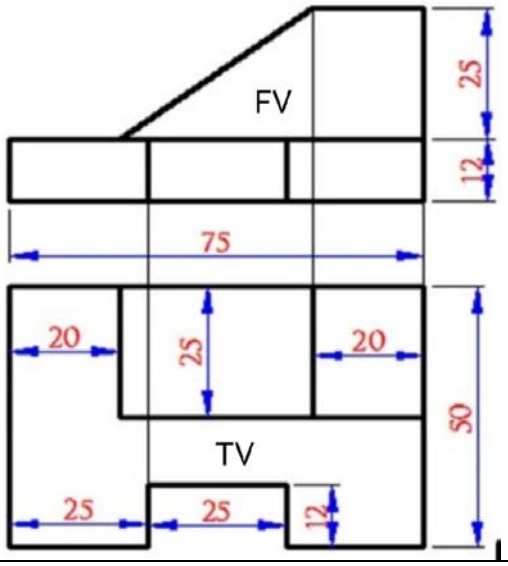 	**(10)**
7.	**(a)**	Write the importance of free hand sketching in engineering.	**(4)**
	(b)	Distinguish between: i. Isometric projection and Orthographic projection. ii. First angle projection and Third angle projection.	**(2×3)**
8.	**(a)**	Given below is the pictorial view of an object. Draw its orthographic projection. 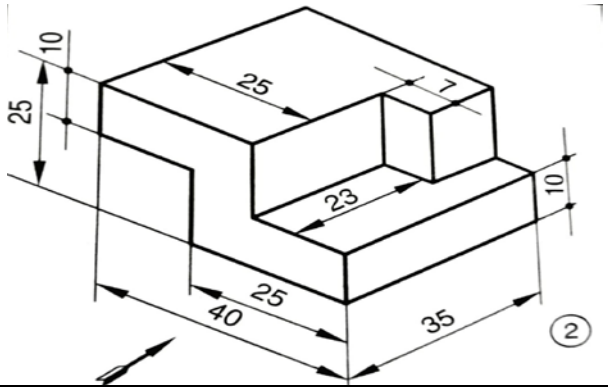 	**(10)**
9.	(a)	Draw the three views of the hexagonal nut (fig given below) for a 24 mm diameter bolt, assuming approximate standard dimensions. 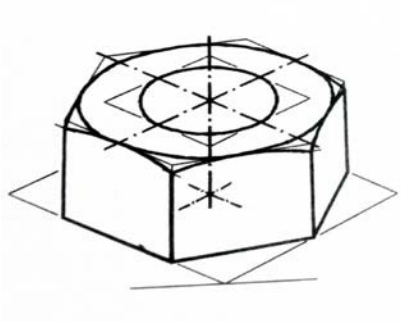 Or Draw the free hand sketch of the following given below 3D shapes and also do the shading as per the direction of light(assume): i. 3-step stairway ii. Cuboid and iii. Pyramid	**(10)**

xxxxxxxxxxxxxxxxxx