Roll No. _____

END SEMESTER EXAMINATION
SEMESTER –IV(BACKLOG)

COURSE CODE :CSE-401 | **DURATION : 3 (THREE)HRS**
COURSE TITLE : DIGITAL ELECTRONIC | **MAXIMUM MARKS :75**
SESSION :JUL-DEC' 2021 | **PASS MARKS : 35 %**

NOTE: 1.Attempt any 5 (five) full questions
3. Mark for each question is shown against it.
4. Assume suitable logical data wherever necessary.

1.	**(a)**	Explain in detail a FULL SUBTRACTOR with the help of suitable diagram and logic table and k-map.	(8)
	(b)	How does a seven segment decoder operate? Explain.	(7)
2.	**(a)**	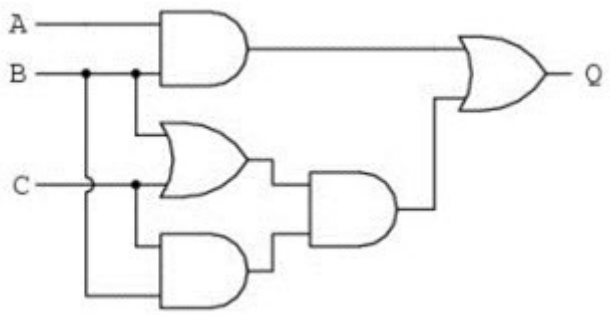 Write the logic equation of the above logic diagram.	(3)
	(b)	Write any five Boolean rules.	**(5)**
	(c)	Solve using 2's complement method: i) 11101-10100ii) 1001-1100	**(2.5*2)**
	(d)	Distinguish between SOP and POS.	**(2)**
3.	**(a)**	Reduce the following expressions using k-map i) $Y=\sum_m(2,3,4,6,8,10,11,12,13)$ ii)$Y=\sum_m(0,2,3,4,5,6,9,12)$	**(5*5=10)**
	(b)	Convert the following i) $32_{10}=(\ )_2$ ii) $315_8=(\ )_{16}$ iii) $B24_{16}=(\ )_{10}$	(2*2.5=5)
4.	**(a)**	Explain the operation of anJ-K flip flop	**(7)**
	(b)	What do you mean by BCD codes? What are the invalid BCD codes.	(2+3)
	(c)	Draw the logic diagram, truth table and Boolean expression of a EXOR gate.	(3)
5.	**(a)**	Explain the working of SIPO registers.	(5)
	(b)	Differentiate between Synchronous and Asynchronous counters.	(3)
	(c)	Design the circuit of a seven segment display.	(7)
6.	**(a)**	Obtain the function of AND,OR and NOT gate from a universal NAND gate.	**(6)**
	(b)	Explain the working of an1:8 DEMUX in detail.	**(7)**
	(c)	Write a short note on EBCIDIC code.	**(2)**

7.	**(a)**	Explain any three Boolean laws in detail.	(6)
	(b)	Distinguish between latch and flip flop.	**(2)**
	(c)	Convert the following in standard POS form. i) Y= (A+B'+C)(A'+C')(B+C+D') ii) (A+B')(B+C'+D)(A+B+C+D)	(2*3.5=7)
8.	**(a)**	State and explain the de Morgan's theorems.	(6)
	(b)	Explain in detail a combinational circuit that can add two bits with the help of suitable logic diagram and logic table.	(5)
	(c)	Represent the binary number 1011011 in i) decimal number ii) gray code	(2*2=4)